ELHO
ALWAYS AHEAD

MOWER CONDITIONERS

- NM 3200 F
- NM 3700 F

- NM 2400 VC
- NM 2800 VC
- NM 3200 VC
- NM 3200 SF

- 3200 C
- 3700 C

- DUETT 7300
- NM 9000
- NM 9000 SF
- NM 10500
- NM 10500 SF

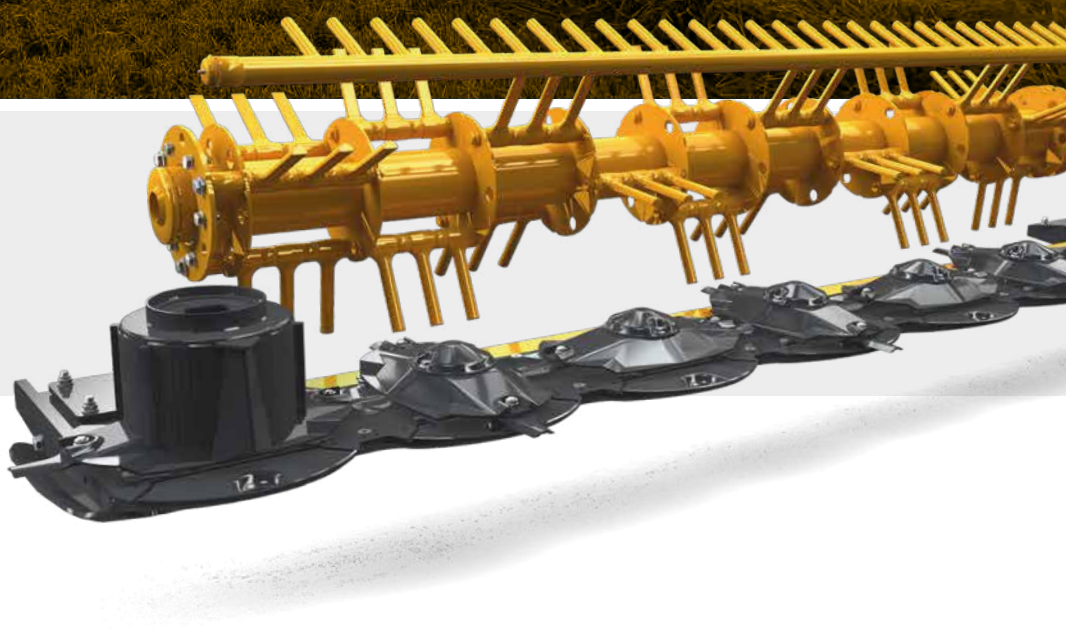

TTT

ELHO - MADE IN FINLAND

ELHO is a Finnish family-owned business that specialises in the development and manufacturing of forage harvesting machinery. The company was founded in 1968 and our products are sold in more than 30 countries around the world. ELHO products are manufactured in Pännäinen, Finland.

Forage quality is our number one priority. We want to help farmers produce the best possible forage. Our easy-to-use and efficient machines produce clean and pre-dried forage. Our product development, sales and after-sales departments always work in close cooperation with the farmer.

ELHO mower conditioners are suitable for both farmers and contractors around the world and for a variety of crops. Particular attention has been paid to the quality and rapid drying of the forage. Rapid drying improves the quality of the forage and allows the crop to be harvested faster.

A properly shaped and airy swath is the key to the efficiency of forage harvesting and quality of forage. ELHO mower conditioners rub the surface wax off the forage plant in many places without cutting or folding the plant itself. This makes the swath airy and dries the forage quickly.

ELHO's product selection offers farmers the most suitable mower conditioner for swathing, spreading or combining.

ELHO F Front mower conditioners
ELHO front mower conditioners feature the Pendulum Centre System, which allows the mowing unit to move freely in its support frame. PCS enables the mower conditioner to be pulled, rather than pushed, thereby avoiding obstacles due to twisting and rocking. This product line includes the NM 3700F, which we believe is the world's widest single-beam front mounted mower conditioner.

ELHO VC/SF Vertical Centre/SideFlow mower conditioners
ELHO side mounted mower conditioners include Vertical Centre (VC) models that follow the centreline of the tractor and SideFlow (SF) models fitted with a swath grouper. All models feature the patented HydroBalance suspension, which allows the tractor to carry most of the machine's weight. The precise suspension mechanism prevents contaminants ending up in the forage and saves fuel. In the event of an obstacle, either the hydraulic HydroActive or a mechanical release device allows the mower conditioner to move back and upwards. The mower conditioner then automatically returns to the working position immediately after the obstacle.

ELHO C Centre mower conditioners
ELHO Centre mower conditioners feature a boom that is attached to the centre of the mower conditioner, allowing it to be manoeuvred in all positions while driving. These mower conditioners can mow from either side of the tractor. They are also easy to connect, they do not strain the rear linkage, and they can be pulled even by smaller tractors.

ELHO Duett and butterfly mower conditioners
ELHO butterfly mower conditioners are suitable for large fields and contracting. Together with a front mower conditioner, butterfly combinations are efficient and balanced. Both basic and technically advanced models are available. Butterfly models feature the SideFlow swath grouper that works with an auger conveyor. Reverse-drive Duett models offer unsurpassed agility and driver ergonomics.

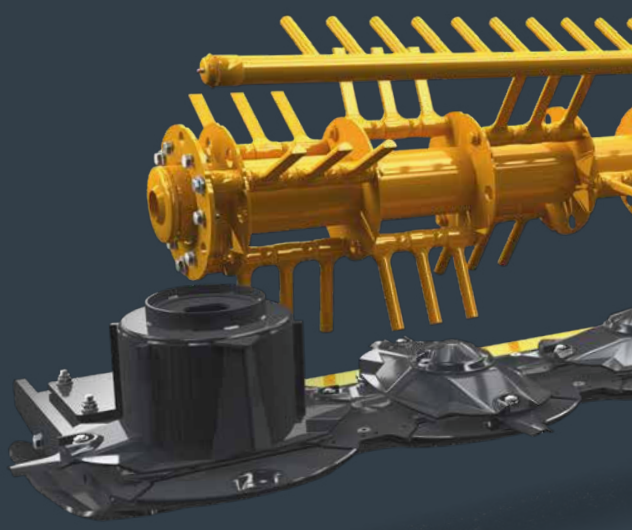

ELHO-mower conditioners 2

Benefits and features of ELHO mower conditioners 4

Cutter bar on ELHO mower conditioners 6

Other special features on ELHO mower conditioners 8

Front mower conditioners 10
NM 3200 F 12
NM 3700 F 13

Vertical Centre mower conditioners 14
NM 2400 VC 16
NM 2800 VC 16
NM 3200 VC 16
NM 3200 SF 17

Centre mower conditioners 18
3200 C 20
3700 C 21

Butterfly mower conditioners 22
DUETT 7300 24
NM 9000 25
NM 9000 SF 25
NM 10500 26
NM 10500 SF 26

Accessories 28

Combinations 29

Technical specifications 30

BENEFITS AND FEATURES OF ELHO MOWER CONDITIONERS

SIDEFLOW AUGER CONVEYOR

SideFlow versions of several ELHO mower conditioners are available. SideFlow is a screw-shaped swath grouper that is extremely reliable: it is equally effective with dry or wet, long or short forage. The SideFlow auger conveyor has a closed structure, so that no forage is wasted, for example when mowing whole grain. SideFlow is lightweight and mounted close to the cutter bar, so the centre of gravity of the machine is close to the tractor. SideFlow is reliable and easy to maintain. It is particularly suitable for harvesting whole grain silage.

CONDITIONER AND COUNTER BAR

The rounded fingers of ELHO conditioners rub and open the surface wax of the entire plant. This keeps the hay uniform, producing more airy swaths. If stones or too much feed gets inside the conditioner, the spring-loaded counter bar gives way. With clover, whole grain silage, and large-leaved and stalking plants, the conditioning power can be lowered or the counter bar can be disengaged completely. The forged fingers are extremely durable.

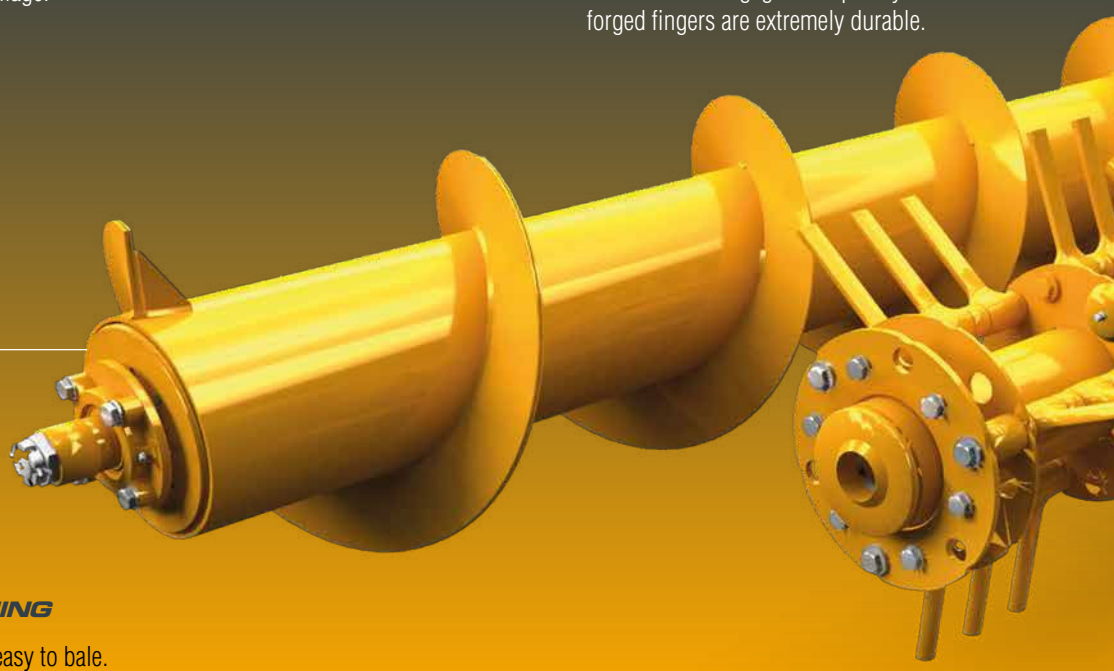

SWATHING

Airy, even, easy to bale.

WIDESPREADING

Some ELHO mower conditioners make it possible to widespread the forage evenly, without a separate rake. Widespreading enhances the drying of the feed. When the mower conditioner spreads the forage directly after mowing, drying is faster and one run is avoided compared to using a separate rake. For example, all SideFlow models have the option of widespreading when the rear hatch of the screw conveyor is opened.

ADJUSTABLE HI-SKIDS

The adjustable hi-skids were originally designed for Finland's rocky and uneven fields. The adjustable hi-skids make it easy to adjust the mowing height.

MOWING DISCS

The mowing discs have rotating blades. The blade is completely hidden under the disc when it hits an obstacle. The oval shape of the disc ensures that the adjacent blades cannot hit the edge of the disc. The disc has a low edge to prevent small stones from getting under the disc.

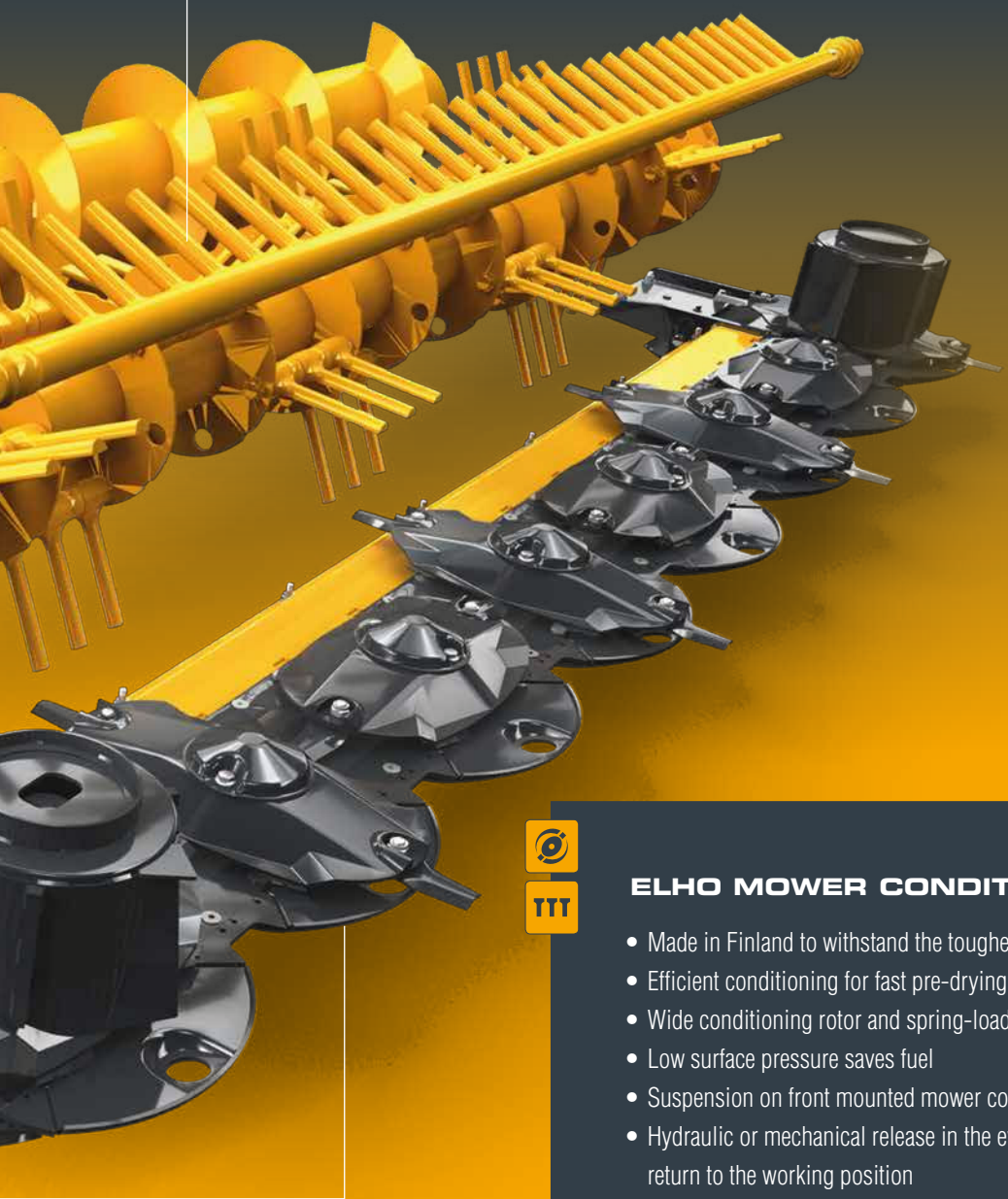

ELHO MOWER CONDITIONERS

- Made in Finland to withstand the toughest conditions
- Efficient conditioning for fast pre-drying
- Wide conditioning rotor and spring-loaded counter bar
- Low surface pressure saves fuel
- Suspension on front mounted mower conditioners protects the machine
- Hydraulic or mechanical release in the event of an obstacle and automatic return to the working position
- HydroBalance suspension allows the tractor to carry most of the weight
- GPS support on the largest models
- Exceptionally clean forage
- Ability to adjust swath width and shape, combine swaths or widespread

ROBUST CUTTER BAR

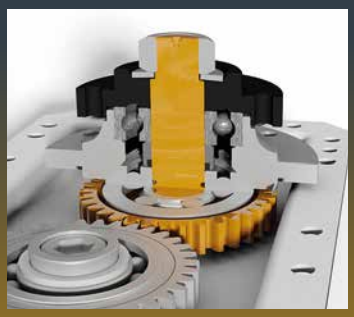

Overload protection
The protection of the cutter bar is very important for the operation of the mower conditioner. To keep the gears of the cutter bar in optimal condition at all times, ELHO has developed a protection mechanism for the drive units of the discs. The disc shaft has a fracture groove between the bearings, which disconnects the shaft if it hits a hard object. This ensures that the gears of the cutter bar remain intact. The wide distance between the bearings provides more strength to the drive shaft of the disc.

Adjustable hi-skids
ELHO mower conditioners come standard with adjustable hi- skids that makes it easy to increase the mowing height by lowering the hi-skids. The mowing height can be adjusted from 3 cm to 12 cm. The high skids are made of Hardox steel. The use of adjustable hi-skids effectively protects both the cutter bar and the ground surface.

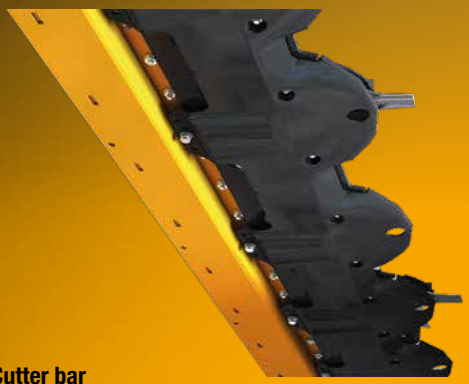

Cutter bar support structure
A robust support bar extends the life of the cutter bar by reducing impact and bending loads. In the event of a collision, the force of the impact is directed from the stone deflector to the support bar instead of to the cutter bar.

Cutter bar cleaners

Mowing discs
The low profile of the mowing discs ensures a good mowing pattern and prevents impediments from getting under the disc. The oval shape of the discs effectively moves the forage forward. The discs are made of hardened boron steel, and the hardening is done only after welding the cutter bar cleaners. The knives rotate around their own axis, which extends their life.

Stone deflectors
The stone deflectors cover the entire cutter bar for optimal protection. The stone deflectors are made from hardened boron steel and are molded. The weld seam is protected on the inside. The reinforcements in the stone deflectors help keep the knives clean.

SIDEFLOW FOR SWATHING

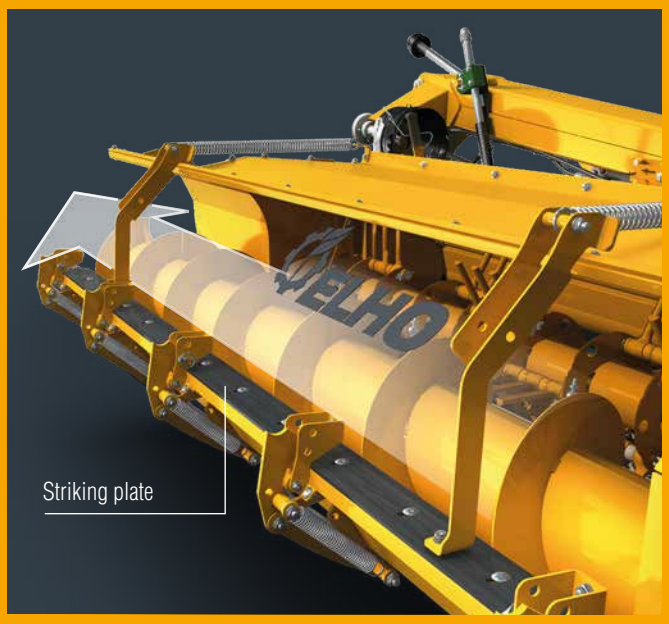

SideFlow auger when rear hatches are closed
The SideFlow auger operates like a belt, only more effectively. The auger rotates at 700 rpm, and the striking plate behind it keeps the hay on top of the auger, which can then move it to the centre. The striking plate prevents the hay from spinning around the auger.

Opening rear hatches
SideFlow models feature rear hatches that open, which offer a range of mowing options. For widespreading forage, the hatches can be opened on both sides. It is also possible to widespread forage on only one side, for example when mowing along the edge of the field.

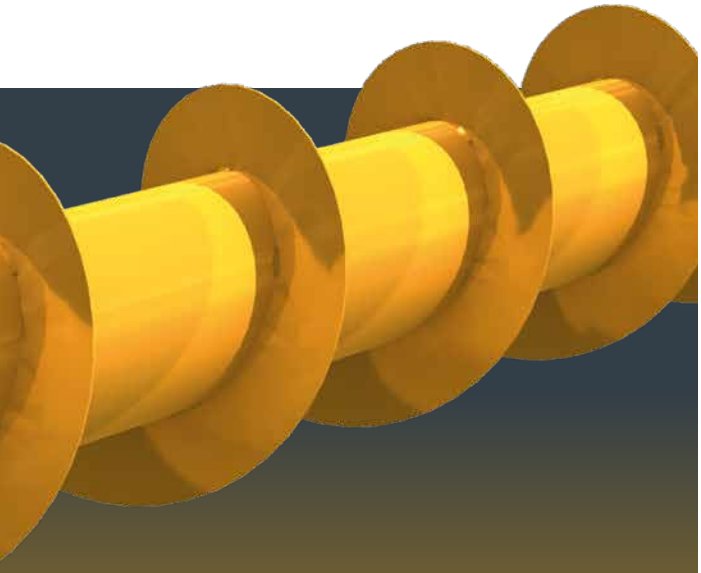

Overload protection for rear hatch
The rear hatches have spring-loaded overload protection that releases if a large object enters the auger or if a blockage is forming.

Auger cutter
A blade at the end of the auger ensures an even flow of forage to the swath and creates an even edge to the swath. The blade also prevents blockages.

ELHO SIDEFLOW MODELS

NM 3200 SF

NM 9000 SF

NM 10500 SF

A PROPER CONDITIONER

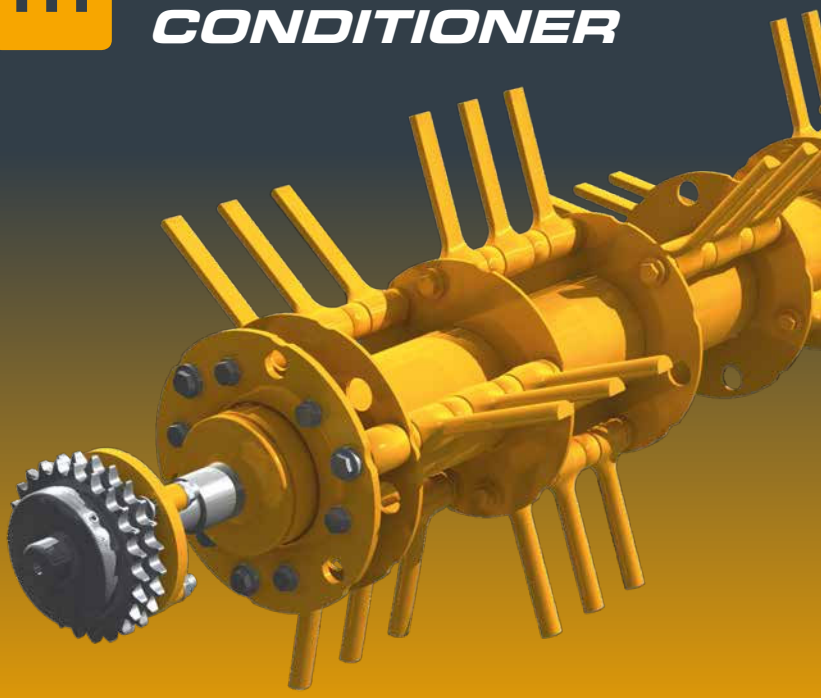

Finger conditioner
ELHO believes that conditioned forage plants dry best by rubbing off the surface wax instead of cutting it. This is why our conditioning rotors have straight, rounded fingers and an adjustable spring-loaded counter bar.

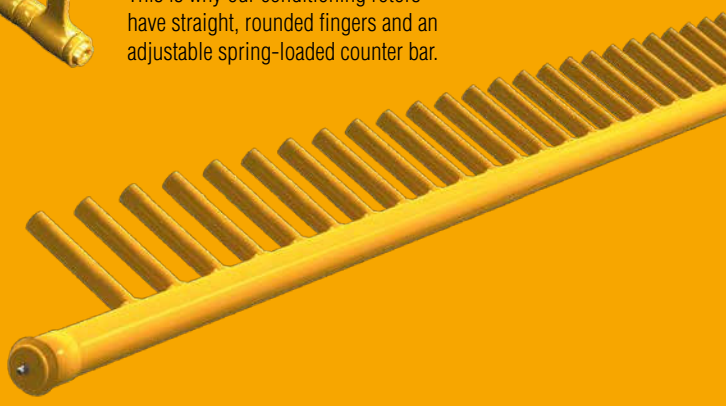

Adjustable counter bar
The conditioning rotor strikes the forage against an adjustable counter bar. The rear cover slows down the speed of the forage and changes its direction. This keeps the swath airy as the hay drops to the ground with its own weight directly from above. If an object or too much forage gets inside the conditioner, the spring-loaded counter bar gives way. The counter bar can also be lifted and deactivated when mowing gentle plants.

FRONT MOWER CONDITIONERS

ELHO front mower conditioners are pulled, not pushed. They feature an upper support frame to which the actual mowing unit is attached. The mowing unit is free to swing and rotate according to the field surface and possible obstacles. HydroBalance suspension keeps the cutter bar at the optimal weight against the ground at all times. Because the front mower conditioner is controlled by its own hydraulic functions, it can be controlled from the desired location, for example next to the controls for the rear mounted mowers. With the NM 10500 butterfly combination, the front unit can be set to work automatically with rear mounted mower conditioners.

We believe the NM 3700 F is the world's widest single-beam front mower conditioner. Still, it has a transport width of just 3.5 metres, making it legal in most countries for road transport. Front mower conditioners work well in combination with rear mounted mower conditioners. Front mower conditioners can also be used with the tractor's reverse-drive system by rotating the conditioner's primary gearbox.

PENDULUM CENTRE SYSTEM

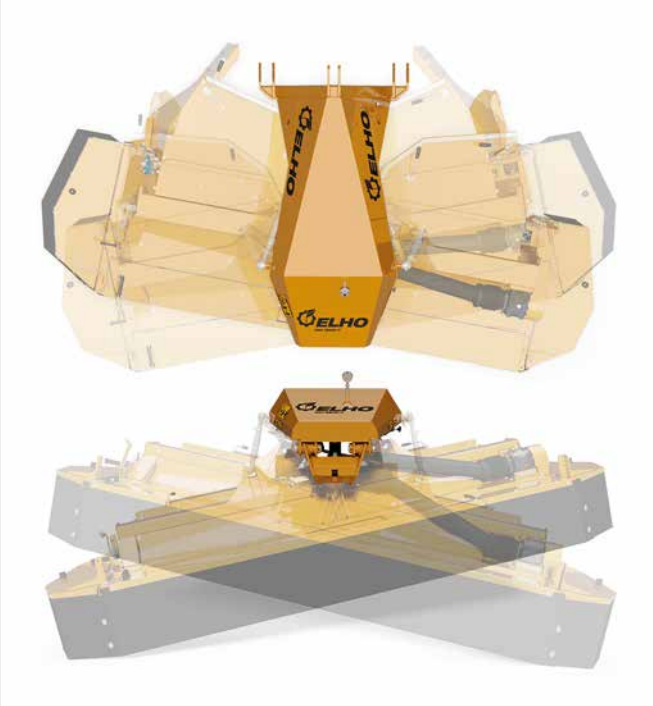

The Pendulum Centre System (PCS) connects the cutter bar to the upper frame. The lightened cutter bar swings and rotates, following the field surface and avoiding obstacles, such as rocks. PCS enables the mower conditioner to be pulled rather than pushed, allowing for lighter operation in the field. The hydraulics of the mower conditioner lighten and lift the mowing unit on the headland, keeping the tractor's linkage at the standard height.

HYDROBALANCE SUSPENSION

HydroBalance is a key feature of ELHO mower conditioners. Even if the mower weighs tonnes, HydroBalance uses a cylinder and a gas accumulator to lighten most of the weight of the machine to be carried by the tractor. The suspension prevents the cutter bar from lifting contaminants into the forage by lightly following the field surface. The low friction also helps reduce fuel consumption. ELHO has been a pioneer in the field in developing suspension systems.

HYDROBALANCE TOP LINK

The HydroBalance top link replaces the standard top link, increasing the suspension of the front mower conditioner and providing more lifting height. As a result, front mower conditioners can be lifted tens of centimetres higher, preventing contact with high swaths on the headland, even when using the SideFlow swath grouper. HydroBalance is ideal for tractors with front axle suspension, which require more room for movement for front mower conditioners. The HydroBalance top link works together with HydroBalance suspension and is available as an option on all front mower conditioners.

CAN BE USED SIMULTANEOUSLY WITH THE FOLLOWING REAR MOUNTED MOWER CONDITIONERS

NM 3200 VC

NM 3200 SF

3200 C
3700 C

NM 9000
NM 9000 SF

NM 10500
NM 10500 SF

NM 3200 F

A front mower conditioner with suspension that produces clean forage.

Watch video

Read more

The NM 3200 F features the Pendulum Centre System (PCS), which enables the mower conditioner to move backwards, swing and rotate. On headlands, the mower conditioner follows the driving line. If the cutting unit hits an obstacle, the suspension reduces the force of the impact by 50 percent.

The NM 3200 F closely follows the field surface thanks to PCS and HydroBalance suspension. This light and precise mower conditioner produces exceptionally clean forage. The NM 3200 F is a good combination with side mower conditioners and especially a butterfly combination.

ELHO NM 3200 Front

- PCS suspends the mower conditioner from the centre of the upper frame above and in front of the conditioner
- HydroBalance enables the mower conditioner follow the field surface closely
- PCS reduces the force of impacts by up to 50 percent
- Can also be operated in reverse on tractors with a reverse-drive system

STANDARD EQUIPMENT

- Primary shaft with overrunning clutch for front PTO or reverse-drive PTO
- Bevel gear 1000 rpm
- Adjustable hi-skids
- HydroBalance suspension

OPTIONAL EQUIPMENT

NM 3200 F

Side lights kit	115355
Hydraulic kit for sideguards	115358
HydroBalance top link Cat2/3	115391
PTO shaft with shear bolt	152073
PTO for LH Link pivoting linkage	152083
Front bar	115353
Standard knife kit 3,2/3,3 m	115158
Flat knife kit L+R 3,2/3,3 m	115168

NM 3200 F (reverse-drive)

Side lights kit	115355
Hydraulic kit for sideguards	115358
HydroBalance top link Cat2/3	115391
PTO shaft with shear bolt	152071
Front bar	115353
Standard knife kit 3,2/3,3 m	115158
Flat knife kit L+R 3,2/3,3 m	115168

ELHO
ALWAYS AHEAD

MIN, kW 70

NM 3700 F

The world's widest front mower conditioner.

Watch video

Read more

The NM 3700 F is the world's widest single-beam front mower conditioner. With a cutting width of 3.7 metres, this model is extremely productive. The conditioner is also very effective at high speeds and in thick growth.

The Pendulum Centre System (PCS) enables the mower conditioner to move freely, while HydroBalance enables it to lightly follow the field surface. This helps prevent contaminants from being lifted into the forage and also reduces fuel consumption.

The NM 3700 F front mower conditioner together with an NM 10500 butterfly mower conditioner is an extremely productive combination. Smart automation and GPS assistance also make it easy to use.

ELHO NM 3700 Front

- PCS suspends the mower conditioner from the centre of the upper frame above and in front of the conditioner
- HydroBalance enables the mower conditioner to follow the field surface closely
- PCS reduces the force of impacts by up to 50 percent
- Extremely popular on tractors with a reverse-drive system
- Optional adapter series available for larger tyres

STANDARD EQUIPMENT

- Primary shaft with overrunning clutch for front PTO or reverse-drive PTO
- Adapter kit for large tyres
- Bevel gear 1000 rpm
- Adjustable hi-skids
- HydroBalance suspension

OPTIONAL EQUIPMENT

NM 3700 F

Side lights kit	115355
Hydraulic kit for sideguards -21	115356
Hydraulic kit for sideguards 22-	115358
HydroBalance top link Cat2/3	115391
PTO shaft with shear bolt	152073
PTO for LH Link pivoting linkage	152083
Front bar	115353
Standard knife kit 3,7 m	115159
Flat knife kit L+R 3,7 m	115169

NM 3700 F (reverse-drive)

Side lights kit	115355
Hydraulic kit for sideguards	115356
HydroBalance top link Cat2/3	115391
PTO shaft with shear bolt	152071
Front bar	115353
Standard knife kit 3,7 m	115159
Flat knife kit L+R 3,7 m	115169

SIDE MOWER CONDITIONERS

ELHO offers a comprehensive range of side mower conditioners from a 2.4-metre wide model to a 3.2-metre SideFlow model with auger conveyor. All models feature HydroBalance suspension, which allows the tractor to carry most of the weight of the mower conditioner. HydroBalance helps produce clean forage and save fuel. Side mower conditioners are suspended in the middle, allowing them to swing freely.

In transport mode, side mower conditioners are raised vertically above the tractor's centreline. This makes them safe to transport by keeping the combination narrow and maintain the centre of gravity over the centreline.

Side mower conditioners are suitable for all types of forage plants and can also be combined with front mower conditioners.

UNSURPASSED CONDITIONING ROTOR

The forged, rounded fingers of ELHO mower conditioners rub the surface wax off the forage plant without cutting or folding the plant itself. The conditioned forage plant can then dry quickly and the swath is airy, since the plants are long. A counter bar adjusts the conditioning power for the desired result, but it can also be disengaged when harvesting more sensitive forage crops.

HYDROBALANCE SUSPENSION

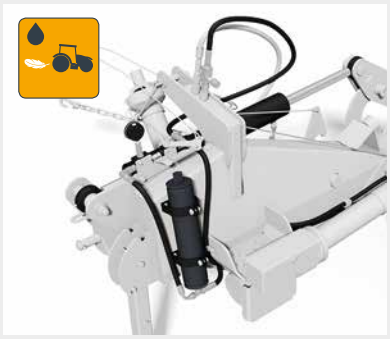

HydroBalance is a key feature of ELHO mower conditioners. Even if the mower weighs tonnes, HydroBalance uses a cylinder and a gas accumulator to lighten most of the weight of the machine to be carried by the tractor. The suspension prevents the cutter bar from lifting contaminants into the forage by lightly following the field surface. The low friction also helps reduce fuel consumption. ELHO has been a pioneer in the field in developing suspension systems.

OPTIMAL STABILITY DURING TRANSPORT

Side mower conditioners are raised above the tractor's centreline during transport, so the centre of balance is as close to the centreline as possible and the combination is stable to transport. When fully raised, side mower conditioners are also narrow and do not extend beyond the sides of the tractor.

MECHANICAL IMPACT PROTECTION

VC models have mechanical impact protection. The spring-operated system activates automatically on impact with an obstacle and enables the mower conditioner to move back and up. The mower conditioner then returns immediately and automatically to its working position.

HYDROACTIVE IMPACT PROTECTION

HydroActive impact protection uses a lift cylinder and release cylinder. When the release cylinder is pressed due to an obstacle, oil from the release cylinder is sent to the lift cylinder. This lifts the mowing unit, which then returns automatically to its working position after the obstacle.

CAN BE USED SIMULTANEOUSLY WITH THE FOLLOWING FRONT MOWER CONDITIONERS

NM 3200 F

NM 3700 F

NM 2400 VC 2800 VC 3200 VC

Impressive flow and high driving speeds, also with smaller tractors

Read more

Watch video

Vertical Centre mower conditioners are known for their impressive flow, high driving speeds and clean forage. The adjustable hi-skids and HydroBalance suspension enable the cutter bar to follow the field surface precisely without hitting the ground. The freely swinging and rounded fingers of the conditioning rotor rub the surface of the crop, while the adjustable counter bar and long conditioning chamber provide excellent drying. Vertical Centre mower conditioners are ideal for use also with smaller tractors on the farm. For example, the NM 2400 VC can be used with a 75-horsepower tractor weighing 3500 kilos.
Vertical Centre mower conditioners enable forage to be harvested with precision. For example, when working with butterfly units, unmown areas can be left between the mower conditioner and the front machine when making sharp turns. Using a combination of a front mower conditioner and a Vertical Centre mower conditioner, it is possible to turn as sharply as possible without leaving any unmown areas.

ELHO NM Vertical Centre models

- Easy to use
- Own lift cylinder enables fast turns on the headland
- HydroBalance suspension
- Cutting unit suspended from the centre
- Centre of gravity over the tractor's centreline in transport mode

STANDARD EQUIPMENT

- Primary shaft with overrunning clutch
- Gearbox 540 rpm
- Gearbox 1000 rpm (2800 VC, 3200 VC)
- Adjustable hi-skids
- HydroBalance suspension
- Mechanical impact protection

OPTIONAL EQUIPMENT - Availability may vary according to market

NM 2400 VC		NM 2800 VC		NM 3200 VC	
• Gearbox 1000 rpm, factory fitted	506127	• Gearbox 540 rpm, factory fitted	506131	• Standard knife kit 3,2 m	115158
• Standard knife kit 2,4 m	115156	• Standard knife kit 2,8 m	115157	• Flat knife kit L+R 3,2 m	115168
• Flat knife kit L+R 2,4 m	115166	• Flat knife kit L+R 2,8 m	115167		

ELHO
ALWAYS AHEAD

MIN, kW 120

NM 3200 SF

SideFlow mower conditioner with impressive features

Read more

Watch video

The versatile NM 3200 SideFlow mower conditioner meets a wide range of needs. Standard features include a light kit, counterweight and SideFlow auger conveyor that is both light and reliable. SideFlow also enables widespreading when the rear hatch of the auger conveyor is opened.

The NM 3200 SideFlow enables a wide range of mowing techniques. By driving up and down the field, swaths are formed in pairs. By driving around a field, swaths will form at regular intervals. To group the swaths, a combination can be used to group the hay cut by four cutter bars into one swath, in which case a six-metre swather can be used to gather forage from a width of 12 metres. When using a combination of front and side mower conditioners, it is advisable to drive the edges of the field counter-clockwise, because then the combination will not leave any uncut areas, even in tight curves.

ELHO NM 3200 SF

- Efficient mowing even with medium-size tractors
- Own lift cylinder enables fast turns on the headland
- HydroBalance suspension and HydroActive hydraulic release
- SideFlow auger conveyor for clean forage or widespreading

STANDARD EQUIPMENT

- Primary shaft with overrunning clutch
- Gearbox 1000 rpm
- Adjustable hi-skids
- HydroBalance suspension
- HydroActive impact protection

OPTIONAL EQUIPMENT - Availability may vary according to market

NM 3200 SF

- Hydraulic kit for sideguards 115359
- Mountain driving kit 115371
- Front bar 115084
- Standard knife kit 3,2/3,3 m 115158
- Flat knife kit L+R 3,2/3,3 m 115168
- Left unit for NM 3200 SF
- NM 9000 SF conversion kit 115094

CENTRE MOWER CONDITIONERS

ELHO Centre mower conditioners are easy to use and suitable for a variety of tractors. Centre mower conditioners are pulled from the centre so that they can be turned to mow equally well from the right or left side of the tractor. In this way, mowing is convenient in both directions and there is no need for unnecessary driving on the headland. Centre mower conditioners are attached to the link arms of the tractor.

Centre mower conditioners feature adjustable hi-skids as standard. Hydraulic stubble adjustment is available as an option, which allows the mowing height to be adjusted optimally while driving. Both Centre models enable widespreading of conditioned forage as standard.

UNSURPASSED CONDITIONING ROTOR

The forged, rounded fingers of ELHO mower conditioners rub the surface wax off the forage plant without cutting or folding the plant itself. The conditioned forage plant can then dry quickly and the swath is airy, since the plants are long. A counter bar adjusts the conditioning power for the desired result, but it can also be disengaged when harvesting more sensitive forage crops.

HYDROBALANCE SUSPENSION

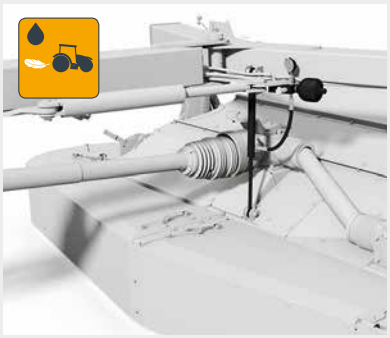

HydroBalance is a key feature of ELHO mower conditioners. Even if the mower weighs tonnes, HydroBalance uses a cylinder and a gas accumulator to lighten most of the weight of the machine to be carried by the tractor. The suspension prevents the cutter bar from lifting contaminants into the forage by lightly following the field surface. The low friction also helps reduce fuel consumption. ELHO has been a pioneer in the field in developing suspension systems.

RIGHT OR LEFT SIDE

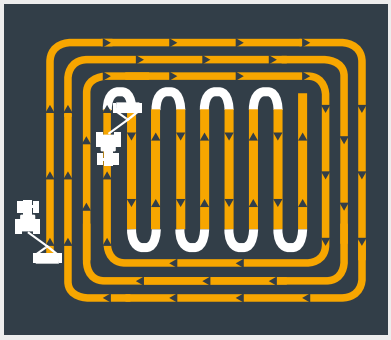

Centre mower conditioners are pulled from the centre so that they can be turned to mow equally well from the right or left side of the tractor. In this way, mowing is convenient in both directions and there is no need for unnecessary driving on the headland.

COMFORTABLE TO USE

The drawbar has a plate spring collision system that absorbs shocks. The spring also protects the bevel gear. The boom's pivot cylinder has end cushioning so that the boom settles softly in both extreme positions. The vibration and noise of trailed mower conditioners are not felt in the same way as tractor-mounted mower conditioners, making them especially comfortable to use.

CAN BE USED SIMULTANEOUSLY WITH THE FOLLOWING FRONT MOWER CONDITIONERS

NM 3200 F

NM 3700 F

NM 3200 C

Tried-and-tested solutions and unsurpassed comfort

Watch video

Read more

The NM 3200 Centre mower conditioner has adjustable hi-skids and can be raised high on the headland. The end-cushioned boom cylinder is attached to the centre of the mowing unit, enabling mowing on both sides of the tractor. The standard HydroBalance suspension lightens the cutter bar so that it does not scrape along the ground or cause unnecessary friction. The cutting height can be adjusted hydraulically while driving using the optional hydraulic stubble adjustment. The bevel gear on NM3200 Centre models can be turned by the operator. In this way, the mower conditioner can also be used on a tractor with just a 540 rpm PTO instead of a 1000 rpm PTO.

ELHO 3200 Center

- Mowing unit can be lifted high on headlands to prevent swath disturbance
- Wide load-bearing tyres (380 mm)
- End cushioning of the boom cylinder
- Adjustable hi-skids as standard
- Widespread function as standard
- Easy to connect and service

STANDARD EQUIPMENT

- Primary shaft with overrunning clutch
- Gearbox 1000/540 rpm
- Adjustable hi-skids
- HydroBalance suspension
- Tyre size 380/55-17
- Mechanical height adjustment
- Mechanical impact protection
- Light kit

OPTIONAL EQUIPMENT - Availability may vary according to market

• Hydraulic kit for sideguards	115720	• Standard knife kit 3,2/3,3 m	115158
• Hydraulic height adjustment	115725	• Flat knife kit L+R 3,2/3,3 m	115168
• Tyre weights	115730		

NM 3700 C

Comfort, agility and power
even with a medium-sized tractor

Read more

The NM 3700 C is easy and comfortable to use, even with a medium-sized tractor. The NM 3700 C produces clean forage regardless of the crop or conditions. The standard HydroBalance suspension lightens the cutter bar so that it does not scrape along the ground or cause unnecessary friction. The cutting height can be adjusted hydraulically while driving using the optional hydraulic stubble adjustment. The 3700 C is available with optional 480 mm wide tyres for soft ground.

ELHO 3700 Center

- Cutting unit can be lifted high on headlands to prevent swath disturbance
- Optional 480 mm wide tyres
- End cushioning of the boom cylinder
- Adjustable hi-skids as standard
- Widespreading function as standard
- Easy to connect and service

STANDARD EQUIPMENT

- Primary shaft with overrunning clutch
- Gearbox 1000 rpm
- Adjustable hi-skids
- HydroBalance suspension
- Tyre size 380/55-17
- Mechanical height adjustment
- Mechanical impact protection
- Light kit

OPTIONAL EQUIPMENT - Availability may vary according to market

• Large tyres 480/45-17, factory fitted	115281	• Standard knife kit 3,7 m	115159
• Hydraulic kit for sideguards	115721	• Flat knife kit L+R 3,7 m	115169
• Hydraulic height adjustment	115726		
• Tyre weights	115730		

BUTTERFLY MOWER CONDITIONERS

ELHO butterfly mower conditioners are efficient combinations for large farms and contracting. With a combination of a front mower conditioner and double butterfly mower conditioner, up to 15 hectares of forage can be harvested per hour. The forage can either be widespread, formed into multiple swaths or grouped into one large swath across the entire working width.

Butterfly mower conditioners are available for a wide variety of needs. The 7.3-metre Duett is designed for tractors with a reverse-drive system. The 9-metre butterfly mower conditioner is very simple in construction and reliable. The 10.5-metre model in turn is the most advanced mower conditioner on the market with its numerous automatic functions and GPS assistance.

UNSURPASSED CONDITIONING ROTOR

The forged, rounded fingers of ELHO mower conditioners rub the surface wax off the forage plant without cutting or folding the plant itself. The conditioned forage plant can then dry quickly and the swath is airy, since the plants are long. A counter bar adjusts the conditioning power for the desired result, but it can also be disengaged when harvesting more sensitive forage crops.

HYDROACTIVE IMPACT PROTECTION

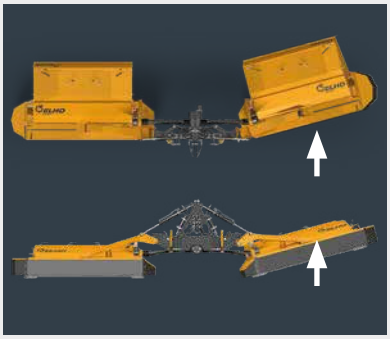

HydroActive impact protection uses a lift cylinder and release cylinder. When the release cylinder is pressed due to an obstacle, oil from the release cylinder is sent to the lift cylinder. This lifts the mowing unit, which then returns automatically to its working position after the obstacle.

COMPACT AND NARROW TO TRANSPORT

All ELHO butterfly mower conditioners fold quickly and easily into a very narrow transport mode. On the Duett model, both wings turn vertically upwards, and the combination is usually not wider than the tractor, depending on the tyre. Models with the SideFlow auger conveyor are also compact with a centre of gravity close to the tractor.

EXCELLENT ERGONOMICS

Butterfly mower conditioners are operated with the operator looking directly at the machine, preventing stress to the back and neck. The Duett offers optimal ergonomics, as it is operated in reverse using the tractor's reverse-drive system, providing an unobstructed view through the rear window to the twin 3.7-metre cutting units. The 10500 model features Headland Automatics (HA) and Automatic Curve Compensation (ACC) to further facilitate operation.

CAN BE USED SIMULTANEOUSLY WITH THE FOLLOWING FRONT MOWER CONDITIONERS

NM 3200 F

NM 3700 F

DUETT 7300

Unsurpassed ergonomics for use with reverse-drive tractors

Watch video

Read more

The Duett 7300 is the ideal mower conditioner for large fields and is designed for use with reverse-drive tractors only. Operating in reverse provides an unobstructed view to the mower conditioner and agile steering thanks to the swivelling rear wheels. The 7.3-metre Duett is also extremely efficient. If there are obstacles in the field or the individual fields are small, the Duett is often more efficient than a butterfly mower conditioner with a wider cutting width.
The cutting unit comprises two 3.7-metre cutter bars that automatically engage when the units are lowered. The Duett does not leave unmown areas even in tight bends. The cutting units feature HydroBalance suspension and lightly follow the field surface, forming high, quick-drying swaths on both sides of the tractor. The swaths are also very suitable for round balers. HydroBalance allows the driving speed to be kept high while still producing clean forage. The transfer from transport mode to the working position and vice versa is quick, as simply raising or lowering the wings is sufficient.

ELHO DUETT 7300

- Ergonomic working position and unobstructed view to the machine
- Extremely agile and prevents tractor from driving over the forage
- Forms twin swaths that are ideal for round balers
- Widespreading function as standard

STANDARD EQUIPMENT

- Primary shaft 45mm Z=20
- Gearbox 1000 rpm
- Adjustable hi-skids
- HydroBalance suspension
- Mechanical impact protection
- Electronic function selector
- Light kit

OPTIONAL EQUIPMENT - Availability may vary according to market

• Standard knife kit 7,3/10,5 m	115160
• Flat knife kit L+R 7,3/10,5 m	115170

NM 9000 9000 SF

Butterfly mower conditioners that do not require large tractors.

Watch video

Watch video, SF

Read more

The 9000 Series is the ideal mower conditioner for contractors and large farms. This powerful machine offers optimal weight distribution, excellent usability, HydroBalance suspension and HydroActive impact protection. The steel finger conditioner and adjustable counter bar facilitate quick drying.

The NM 9000 is available with or without the SideFlow swath combiner. Automatic overload protection opens the rear hatch if a large object enters the machine or if a blockage is forming. In transport mode, the centre of gravity is over the tractor's centreline, so even smaller tractor remain stable.

ELHO NM 9000 & NM 9000 SF

- Low weight and even weight distribution
- Low power requirement compared to width, high capacity
- HydroBalance suspension and HydroActive impact protection
- Quick transfer between transport mode and work position
- SideFlow auger conveyor produces clean and airy swaths

STANDARD EQUIPMENT

- Primary shaft with overrunning clutch and overload protection
- Gearbox 1000 rpm
- Adjustable hi-skids
- HydroBalance suspension
- HydroActive impact protection
- Light kit

OPTIONAL EQUIPMENT - Availability may vary according to market

NM 9000

Hydraulic kit for sideguards	115363
Mountain driving kit	115364
Front bar	115085
Electronic HydroBalance suspension	115385
Standard knife kit 9 m	115161
Flat knife kit L+R 9 m	115171
Electronic headland lift kit	115389

NM 9000 SF

Hydraulic kit for sideguards	115363
Mountain driving kit	115364
Front bar	115085
Electronic HydroBalance suspension	115385
Auger extension kit	115091
Standard knife kit 9 m	115161
Flat knife kit L+R 9 m	115171

- Electronic headland lift kit 115389

NM 10500
10500 SF

Widest butterfly mower conditioner with an auger on the market, packed with advanced features.

Watch video

Watch video, SF

Read more

NM 10500 butterfly mower conditioners feature adjustable working width from 9.4 to 10.5 metres, enabling them to be used together with front mower conditioners of different sizes. The 10500 series features AutoBalance, i.e. automatic HydroBalance suspension, which maintains the optimal position at all times, also in curves. Automatic Curve Compensation (ACC) uses the machine's own GPS system to adjust the overlap of the cutter bars in curves to prevent any unmown areas between the front and rear units. The same GPS system is used for the Headland Automatics (HA), which raises the rear mower conditioners automatically at the exact same spot where the front unit was raised. In this way, the operator can focus on the front unit alone. The HydroActive hydraulic release device provides impact protection in case of obstacles, while the SideFlow auger conveyor is ideal for harvesting forage plants with stalks.

For the ultimate cutting power and highest possible comfort levels, the NM 10500 is the right choice!

ELHO NM 10500 & NM 10500 SF

- 10.5-metre cutting width with a 1.1-metre width adjustment range
- AutoBalance automatic suspension system and HydroActive impact protection
- Automatic Curve Compensation (ACC) using GPS
- Headland Automatics (HA) using GPS
- Temperature sensors in gearbox to detect faults
- Centre of gravity close to the tractor provides stable transport
- SideFlow auger conveyor produces clean and airy swaths

STANDARD EQUIPMENT

- Primary shaft with overrunning clutch and overload protection
- Bevel gear 1000 rpm
- Adjustable hi-skids
- HydroBalance suspension
- HydroActive impact protection
- Light kit
- GPS

OPTIONAL EQUIPMENT - Availability may vary according to market

NM 10500

• Standard knife kit 7,3/10,5 m	115160
• Flat knife kit 7,3/10,5 m	115170
• USB Navpad	148887

NM 10500 SF

• Standard knife kit 7,3/10,5 m	115160
• Flat knife kit 7,3/10,5 m	115170
• Auger extension kit	115097
• USB Navpad	148887

GPS TECHNOLOGY

The NM 10500 uses GPS technology for its Headland Automatics (HA) and Automatic Curve Compensation (ACC), as well as for calculating the number of hectares covered.

Headland Automatics (HA)
Headland Automatics makes work much easier for the driver, who simply has to press a button to raise or lower the front unit in the headland. GPS automatics ensure that the rear units are raised and lowered automatically at the same spot as the front unit.

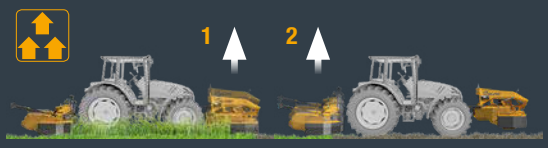

Entering the headland

Departing the headland

Automatic Curve Compensation (ACC)
Automatic Curve Compensation uses GPS to adjust the overlap in curves to prevent any unmown areas between the front and rear units.

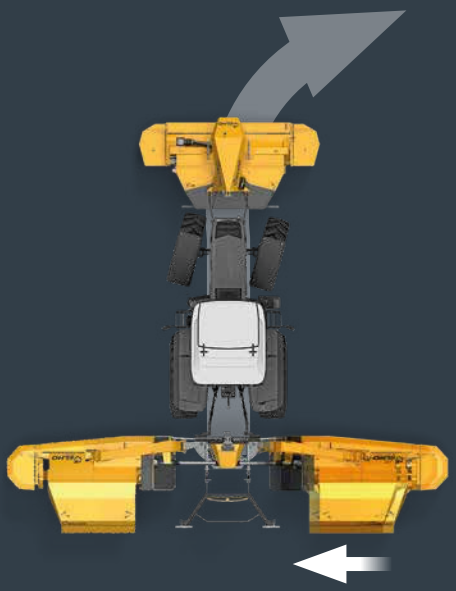

ELHO MOWER CONDITIONERS – ACCESSORIES

Knife kits for ELHO mower conditioners

Standard knife kits

NM 2400 VC	2,4 m	115156	**NM 3700 F**	3,7 m	115159
NM 2800 VC	2,8 m	115157	**Duett 7300**	7,3/10,5 m	115160
NM 3200 VC	3,2/3,3 m	115158	**NM 9000**	9 m	115161
NM 3200 SF	3,2/3,3 m	115158	**NM 9000 SF**	9 m	115161
NM 3200 F	3,2/3,3 m	115158	**NM 10500**	7,3/10,5 mm	115160
3200 C	3,2/3,3 m	115158	**NM 10500 SF**	7,3/10,5 mm	115160
3700 C	3,7 m	115159			

Flat knife kits

NM 2400 VC	V ja O 2,4 m	115166	**NM 3700 F**	V ja O 3,7 m	115169
NM 2800 VC	V ja O 2,8 m	115167	**Duett 7300**	V ja O 7,3/10,5 m	115170
NM 3200 VC	V ja O 3,2/3,3 m	115168	**NM 9000**	V ja O 9 m	115171
NM 3200 SF	V ja O 3,2/3,3 m	115168	**NM 9000 SF**	V ja O 9 m	115171
NM 3200 F	V ja O 3,2/3,3 m	115168	**NM 10500**	V ja O 7,3/10,5 m	115170
3200 C	V ja O 3,2/3,3 m	115168	**NM 10500 SF**	V ja O 7,3/10,5 m	115170
3700 C	V ja O 3,7 m	115169			

Other accessories for ELHO mower conditioners

Hydraulic kit for sideguards

NM 3200 VC		115369
NM 3200 SF		115369
3200 C		115720
3700 C		115721
NM 3200 F		115358
NM 3700 F	-2021	115356
NM 3700 F	2021-	115358
NM 9000		115363
NM 9000 SF		115363

Mountain driving kit

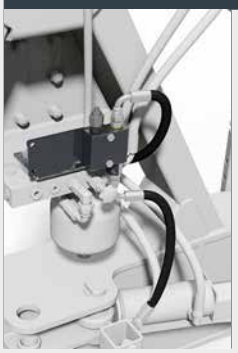

NM 3200 SF	115371
NM 9000	115364
NM 9000 SF	115364

Front bar

NM 2400 VC	115082
NM 2800 VC	115083
NM 3200 VC	115084
NM 3200 SF	115084
NM 3200 F	115353
NM 3700 F	115353

HydroBalance top link Cat2/3

NM 3200 F	115391
NM 3700 F	115391

Light kit

NM 3200 F	115355
NM 3700 F	115355

Large tyres 480/45-17

3700 C	115281

Hydraulic height adjustment	
	3200 C **3700 C**

Gearbox	
	NM 2400 VC factoryfit 1000 **NM 2800 VC** factoryfit 540

PTO shaft with shear bolt	
	NM 3200 F **NM 3700 F**

ELHO MOWER CONDITIONERS – COMBINATIONS

	NM 3200 F	NM 3700 F
NM 2800 VC	Working width Overlap 35-45 cm	Working width Overlap 60-70 cm
NM 3200 VC	Working width Overlap 35-45 cm	Working width Overlap 60-70 cm
NM 3200 SF	Working width Overlap 35-45 cm	Working width Overlap 60-70 cm
3200 C	Working width Overlap controlled by boom	Working width Overlap controlled by boom
3700 C	Working width Overlap controlled by boom	Working width Overlap controlled by boom
NM 9000	Working width Overlap 35-40 cm	Working width Overlap 60-65 cm
NM 9000 SF	Working width Overlap 35-40 cm	Working width Overlap 60-65 cm
NM 10500	Working width Overlap 0-60 cm	Working width Overlap 30-85 cm
NM 10500 SF	Working width Overlap 0-60 cm	Working width Overlap 30-85 cm

ELHO MOWER CONDITIONERS – TECHNICAL SPECIFICATIONS

	NM 3200 F	NM 3700 F	NM 2400 VC	NM 2800 VC	NM 3200 VC	NM 3200 SF
Tractor power requirment, min/max, kW*	60-90	70-100	50-80	60-90	70-100	120-160 ***)
Minimum recommended tractor weight, kg*	5000	6000	3500	4000	4500	6500
Minimum recommended front mower, m					3,2	3,2
Working width, m	3,2	3,7	2,4	2,8	3,2	3,2
Number of discs	8	9	6	7	8	8
Adjustable hi-skids	X	X	X	X	X	X
Round forged steel finger	X	X	X	X	X	X
Rotor width, mm	2500	2500	1750	2150	2500	2500
Rotor speed, RPM	920	920	800/630	920	920	920
Swath width, m	1,2-1,8	1,2-1,8	0,6-1,4	0,9-1,8	1,3-2,1	1,4-2,3
Widespreading						X
Auger conveyor						X
HydroBalance suspension	X	X	X	X	X	X
HydroActive release	X	X				X
Mechanical release, automatic return			X	X	X	
Transport width, m	3	3,5	2,5	2,5	2,5	2,5
Height in transport mode, m			2,75	3,1	3,5	3,7
Tyre size						
Optional tyre size						
Weight, kg	1100	1250	970	1050	1150	2150****)
PTO speed, 1000 RPM	X	X	0	X	X	X
PTO speed, 750 RPM	0	0				
PTO speed, 540 RPM			X	0		
Load sensing hydraulics						
Hydraulic coupling, single action	1	1				1
Hydraulic coupling, double action			1	1	1	
Hydraulic pressure, min/max bar	140-210	150-210	120-210	120-210	120-210	160-210
PTO connection 1 3/8"-Z6	X	X	X	X	X	X
3 point linkage	Cat.2/3	Cat.2/3	Cat.2	Cat.2	Cat.2/3	Cat.2/3

*) The tractor weight and power is determined based on the conditions
**) front mower not included
***) front mower Included
****) including couter weight, 700 kg
X = Standard 0 = Option - = Not available

NM 3200 C	NM 3700 C	Duett 7300	NM 9000	NM 9000 SF	NM 10500	10500 SF
60-90	70-100	140-180	150-180 ***)	160-200 ***)	180-240 ***)	190-260 ***)
			3,2	3,2	3,2	3,2
3,2	3,7	7,3	9	9	9,4-10,5	9,4-10,5
8	9	18	16	16	18	18
X	X	X	X	X	X	X
X	X	X	X	X	X	X
2500	2500	2x2150	2x2500	2x2500	2x2150	2x2150
900/1100	900/1100	900/1100	920	920	900/1100	900/1100
1,3-2,5	1,3-2,5	2x1,3-1,7	2x1,3-2,1 **)	1,4-2,3	2x1,3-1,7	1,6-2,5
X	X			X		X
				X		X
X	X	X	X	X	X	X
			X	X	X	X
		X				
3,1	3,5	2,8	3	3	3	3
		4	3,7	3,7	4	4
380/55-17	380/55-17					
	480/55-17					
2100	2300	2700	2500	3150	3400	4080
X	X	X	X	X	X	X
0	0					
X						
					P,T,LS	P,T,LS
1+1	1+1	3	2	2		
1	1	1				
160-210	160-210	180-210	140-210	160-210	180-210	180-210
X	X	X	X	X	X	X
Cat.2	Cat.2	Cat.3	Cat.2/3	Cat.2/3	Cat.3	Cat.3

Your Elho dealer

Manufacturer

OY EL-HO AB

Teollisuustie 6

68910 Pännäinen

Puh. 06 7888 000

ELHO@ELHO.fi

www.ELHO.fi

4/2022